CHO-M40XX-COS

Short description

Change-over sensor for mounting on the outside of the water pipe to control supplementary heating and cooling register. Order necessary with RLT FLAT central air handling unit.

Article number	0043.2875

Technical data

Installation site	Outside on the water pipe
Housing material	Synthetic material
Weight	0,2 kg
Weight including packaging	0,24 kg
Width	100 mm
Height	50 mm
Depth	50 mm
Width with packaging	110 mm
Height with packaging	60 mm
Depth with packaging	60 mm
Packing unit	1 piece
Range	X
GTIN (EAN)	4012799321743
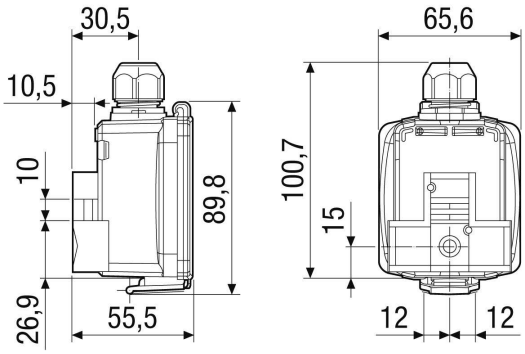
Dimensioned drawing [mm]