DZF 40/4 B

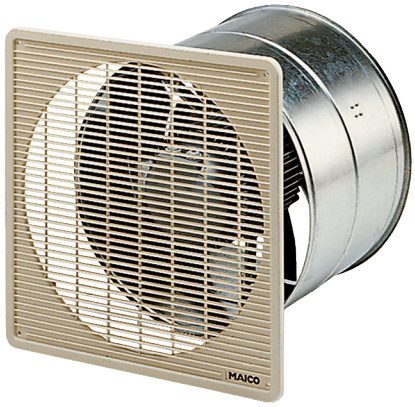

Short description

Axial wall fan for recessed-mounted installation, DN 400, three-phase AC

Application examples

Changing room, Foreman's office, Restaurant, Garage, Fitness room

Article number	0085.0107

Technical data

Model	Wall sleeve
Air flow volume	4.200 m³/h
Air volume$_{nom}$	2.640 m³/h (in opt. efficiency)
Pressure $p_{fs, nom}$	87 Pa (in opt. efficiency)
Rotating speed n_{nom}	1.440 1/min (in opt. efficiency)
Rotating speed	1.454 1/min
Impeller type	axial
Speed controllable	✓
Reversing capacity	✓
Type of voltage	Three-phase AC
Rated voltage	400 V
Frequency	50 Hz
Nominal output	230 W (in opt. efficiency)
I_{nom}	0,6 A (in opt. efficiency)
I_{max}	0,75 A
Degree of protection	IP 55
Insulation class	B
Mains cable	7 x 1,5 mm²
Installation site	Wall / Ceiling
Type of installation	Recessed-mounted
Installation position	horizontal / vertical
Material	Sheet steel, galvanised
Colour	Silver
Weight	13,02 kg
Weight including packaging	14,58 kg
Nominal size	400 mm
Width	470 mm
Height	470 mm
Depth	300 mm

DZF 40/4 B

Width with packaging	490 mm
Height with packaging	490 mm
Depth with packaging	345 mm
Airstream temperature at nominal current	60 °C
Airstream temperature at I_{Max}	-20 °C up to 60 °C
Packing unit	1 piece
Range	C
GTIN (EAN)	4012799851073

Technical data according to ErP in Best Efficiency Point (BEP)

Total efficiency η	32,4 %
Measurement category	A
Efficiency category	static
Efficiency level N	42,7
VSD necessary	No
Year of manufacture	see rating plate
Manufacturer's name / official registration number / manufacturer's place of establishment	Maico Elektroapparate-Fabrik GmbH / Freiburg registration court, HRB 601233 / Villingen-Schwenningen
Art. No.	0085.0107
P_{BEP} / Air $volume_{BEP}$ / $P_{fs, BEP}$	0,231 kW / 3.060 m³/h / 88 Pa
n_{BEP}	1.445 1/min
Specific ratio	≈ 1
Information about dismantling and disposal	see mounting instructions
Information about installation, operation and repairs	see mounting instructions
Objects used to measure efficiency which are not described by the measurement category	Calculation of energy efficiency without protective grille.
Sound power levelL_{WA7}	81 dB(A)

Sound power level in octave range

	63 Hz	125 Hz	250 Hz	500 Hz	1 kHz	2 kHz	4 kHz	8 kHz	Total
L_{WA7}, S5 (dB(A))	43	59	71	76	73	72	67	57	80

L_{WA7}= housing and free inlet sound power level in dB.

DZF 40/4 B

Characteristic curve

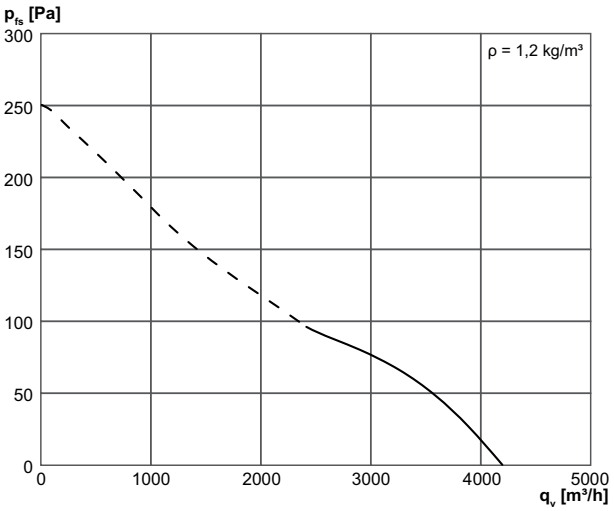

Dimensioned drawing [mm]

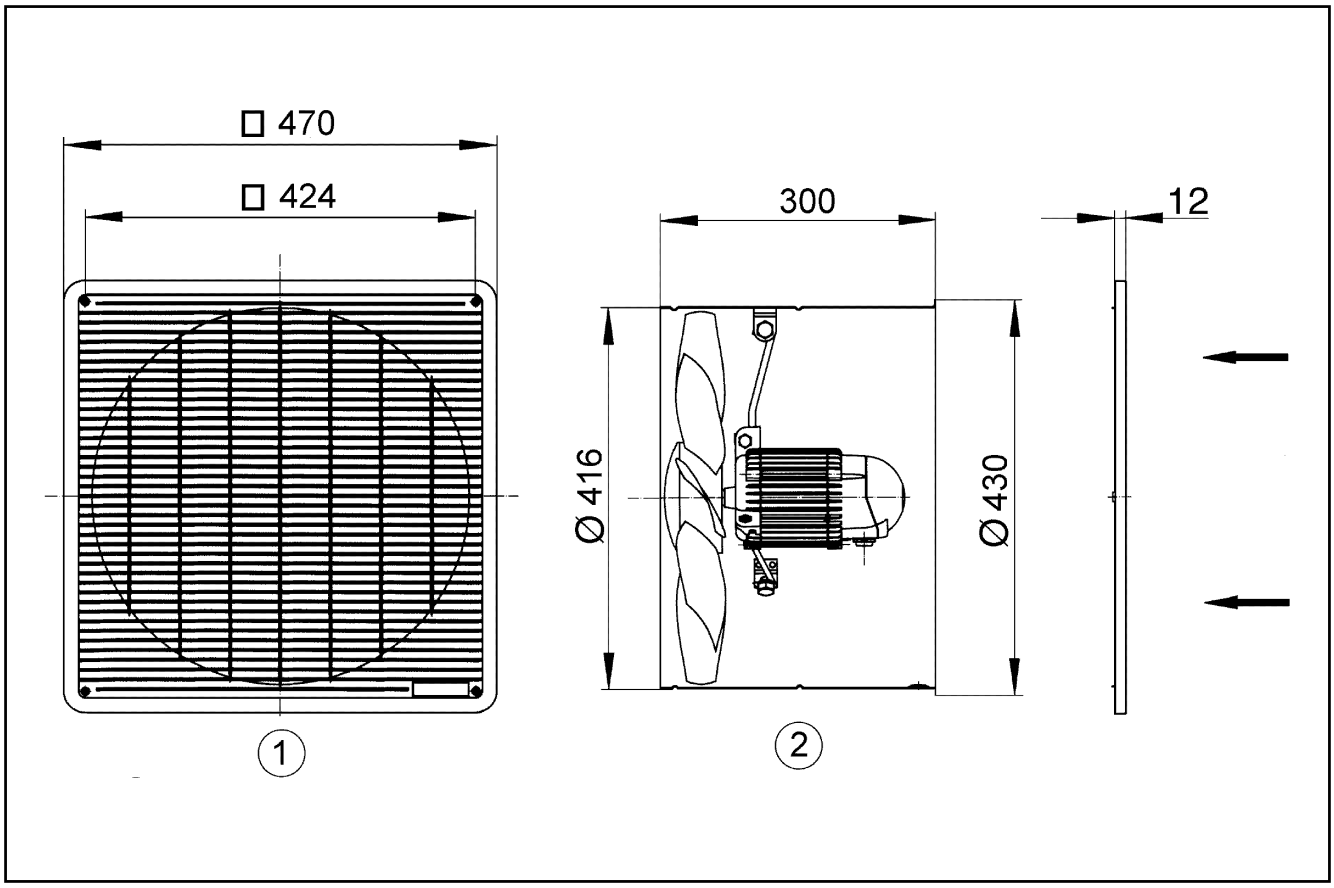

① Protective grille on intake side
② Air flow direction with air drawn across the motor

DZF 40/4 B