EZR 30/2 B

Short description

Axial duct fan, DN 300, single-phase AC

Application examples

Machine extraction unit, Showroom, Foreman's office, Workshop, Production site

Article number	0086.0005

Technical data

Air flow volume	3.690 m³/h
Air volume$_{nom}$	2.660 m³/h (in opt. efficiency)
Pressure $p_{fs, nom}$	165 Pa (in opt. efficiency)
Rotating speed n_{nom}	2.830 1/min (in opt. efficiency)
Rotating speed	2.884 1/min
Impeller type	axial
Speed controllable	✓
Reversing capacity	✓
Type of voltage	Alternating current
Rated voltage	230 V
Frequency	50 Hz
Nominal output	350 W (in opt. efficiency)
I_{nom}	1,6 A (in opt. efficiency)
I_{max}	2,4 A
Degree of protection	IP 55
Insulation class	B
Pole-changeable	–
Installation position	horizontal / vertical
Material	Sheet steel, galvanised
Colour	Silver
Weight	12,08 kg
Weight including packaging	12,88 kg
Nominal size	300 mm
Width	380 mm
Height	424 mm
Depth	300 mm
Width with packaging	420 mm
Height with packaging	430 mm
Depth with packaging	330 mm

EZR 30/2 B

Airstream temperature at nominal current	60 °C
Airstream temperature at I_{Max}	-20 °C up to 60 °C
Packing unit	1 piece
Range	C
GTIN (EAN)	4012799860051

Technical data according to ErP in Best Efficiency Point (BEP)

Total efficiency η	51 %
Measurement category	D
Efficiency category	total
Efficiency level N	60,4
VSD necessary	No
Year of manufacture	see rating plate
Manufacturer's name / official registration number / manufacturer's place of establishment	Maico Elektroapparate-Fabrik GmbH / Freiburg registration court, HRB 601233 / Villingen-Schwenningen
Art. No.	0086.0005
P_{BEP} / Air volume$_{BEP}$ / $P_{fs, BEP}$	0,32 kW / 3.140 m³/h
n_{BEP}	2.850 1/min
Specific ratio	≈ 1
Information about dismantling and disposal	see mounting instructions
Information about installation, operation and repairs	see mounting instructions
Objects used to measure efficiency which are not described by the measurement category	-
$p_{f, BEP}$	187 Pa
Sound power levelL_{WA5}	83 dB(A)

Sound power level in octave range

	63 Hz	125 Hz	250 Hz	500 Hz	1 kHz	2 kHz	4 kHz	8 kHz	Total
L_{WA2}, S1 (dB(A))	–	–	–	–	–	–	–	–	52
L_{WA2}, S2 (dB(A))	–	–	–	–	–	–	–	–	66
L_{WA2}, S3 (dB(A))	–	–	–	–	–	–	–	–	71
L_{WA2}, S4 (dB(A))	–	–	–	–	–	–	–	–	73
L_{WA2}, S5 (dB(A))	38	51	55	67	70	67	64	52	74
L_{WA5}, S1 (dB(A))	–	–	–	–	–	–	–	–	67
L_{WA5}, S2 (dB(A))	–	–	–	–	–	–	–	–	83

EZR 30/2 B

	63 Hz	125 Hz	250 Hz	500 Hz	1 kHz	2 kHz	4 kHz	8 kHz	Total
L_{WA5}, S3 (dB(A))	–	–	–	–	–	–	–	–	86
L_{WA5}, S4 (dB(A))	–	–	–	–	–	–	–	–	87
L_{WA5}, S5 (dB(A))	39	51	67	81	84	82	76	68	88
L_{WA6}, S1 (dB(A))	–	–	–	–	–	–	–	–	67
L_{WA6}, S2 (dB(A))	–	–	–	–	–	–	–	–	83
L_{WA6}, S3 (dB(A))	–	–	–	–	–	–	–	–	86
L_{WA6}, S4 (dB(A))	–	–	–	–	–	–	–	–	87
L_{WA6}, S5 (dB(A))	39	51	67	81	84	82	76	–	88

L_{WA2}= housing sound power level in dB.
L_{WA5}= free inlet sound power level in dB.
L_{WA6}= free outlet sound power level in dB.

Characteristic curve

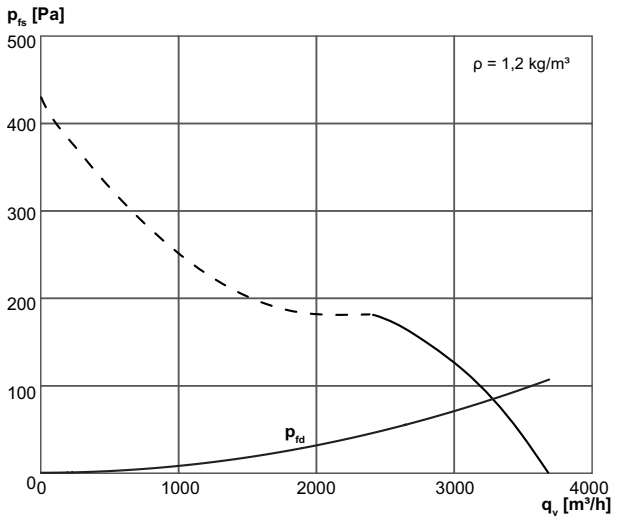

EZR 30/2 B

Dimensioned drawing [mm]

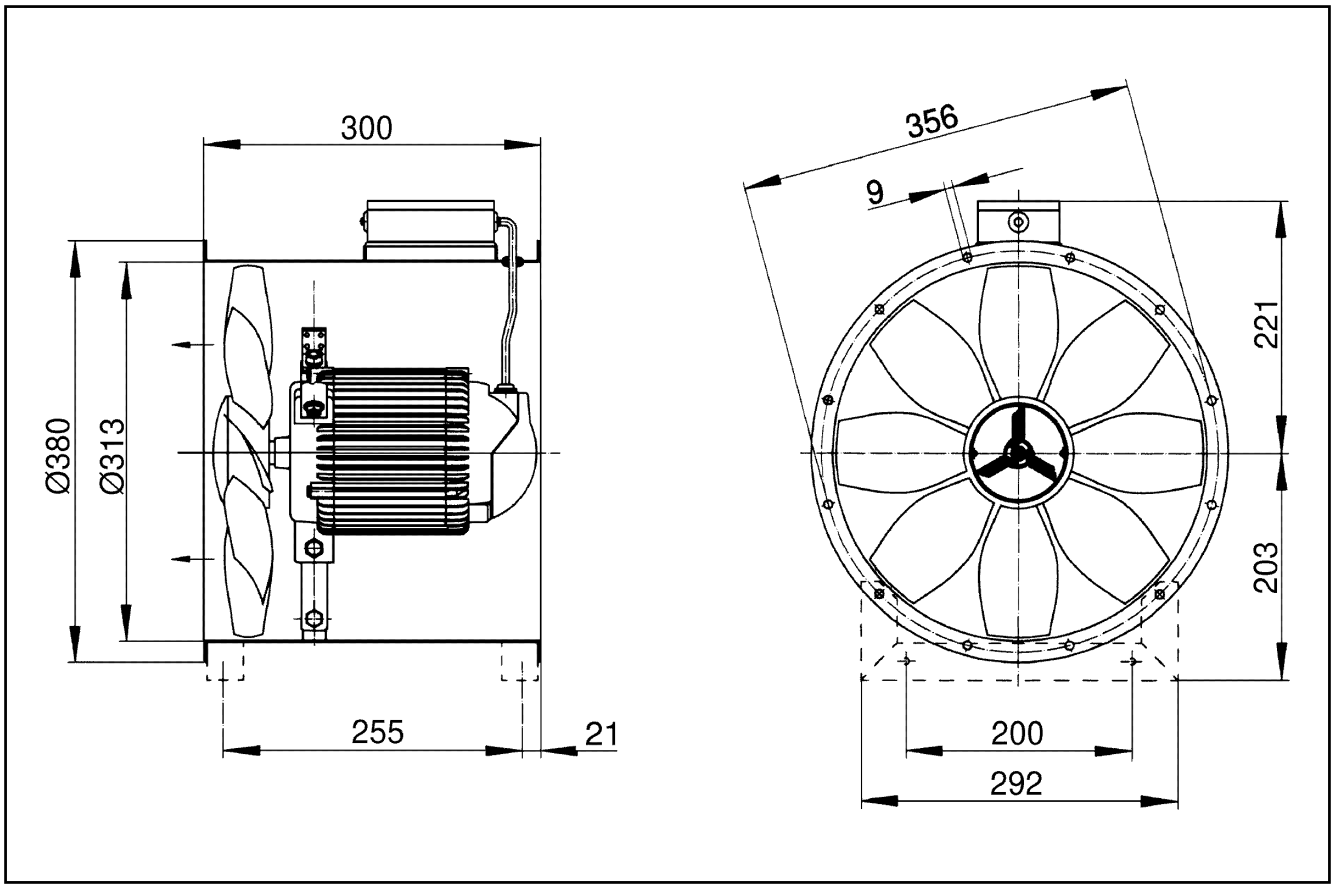

Number of flange holes: 8