WIRING DIAGRAM

MK 20

ENR 20, ENR 25, ENR 31 with on/off switch and three-position switch

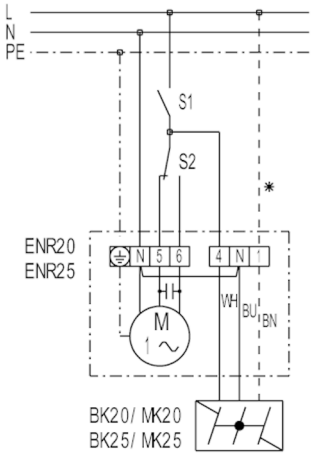

S1 - On / Off
S2 - Switching between air extraction and ventilation
Terminal 5 - Air extraction
Terminal 6 - Ventilation
* - duct only for MK... shutter

MK 20

ENR 20, ENR 25, ENR 31 with FS 6, FS 7 reversing switch

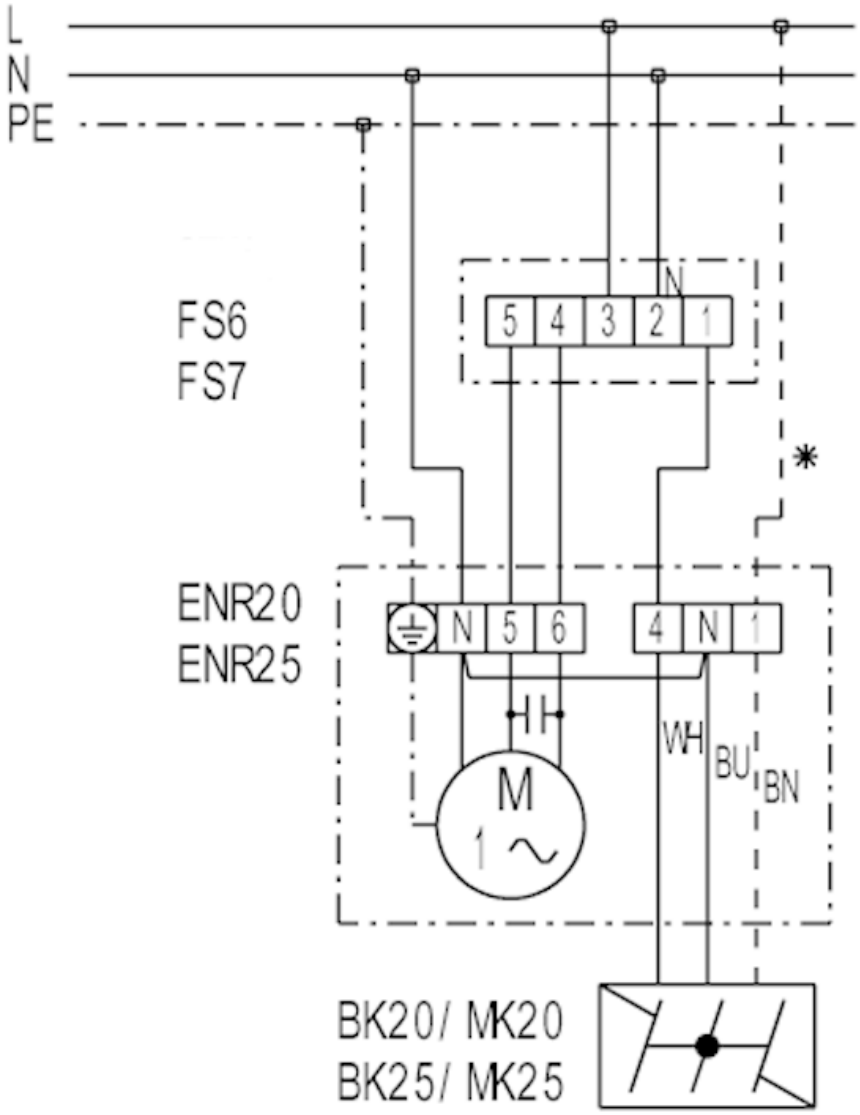

FS 6 - Step switch for (2-speed, air extraction or ventilation)
FS 7 - Reversing switch (air extraction or ventilation)
* - duct only for MK... shutter

MK 20

ENR 20, ENR 25, ENR 31 with W 1, WU 1 reversing switch

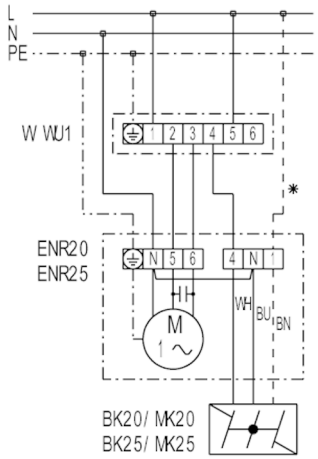

W 1 - Reversing switch (air extraction or ventilation), surface-mounted
WU 1 - Reversing switch (air extraction or ventilation), recessed-mounted
* - duct only for MK... shutter